GTSD18

Overview

GTSD18 series servo driver is a product integrating industrial PC, motion control and servo drive. It has built-in high-performance motion control algorithms, which can complete the planning and control of complex paths. The integration of motion control and servo drives makes the control more efficient. GTSD18 series servo driver integrates a high-precision sensor transmission module, which greatly simplifies the customer's electrical design and improves the performance and reliability of the equipment.

Customers can use C language or OtoStudio software platform for system development.

GTSD18 series servo driver can be used in servo press, CNC machine tools, printing, hydraulic press, servo punch, slitting machine, bag making machine and other fields.

Main Features

- Precision force position control.
- Speed and position control of high-speed, high-precision current.
- Support multiple encoders.
- gLink-II real-time ring network to realize multi-channel and multi-axis linkage.
- Support secondary development.
- Simple wiring and convenient debugging.

Specifications

Function	Item	Description
Computer Function	CPU	4 Core 2GHz
	Memory	2GB
	Hard Disk	4GB
	OS	WinCE 6.0、Win7、Win10
Software	No. of Controlled Axis	12 Axis
	Control Cycle	250us
	Extended Analog IO	24 channels AI, 24 channels AO.
	Extended Digital IO	128 channels DI, 128 channels DO.

All product specifications are subject to change without notice.

Specifications

Function	Item	Description
Main Loop Power Supply	Rated Voltage (V)	3 Phases: 380V, fluctuation range -15% ~ 10% (323V ~ 418V)
	Rated Frequency (Hz)	50Hz ~ 60Hz, fluctuation range ±5%
Output Features	Applicable Motor (kW)	Please refer the Ordering Guide
	Rated Output Current (A)	Please refer the Ordering Guide
	Output Voltage (V)	Output 3 phases under rated conditions, 0V ~ rated input voltage.
	Output Frequency (Hz)	0 ~ 1000Hz
	Overload Features	HD: 120% rated current for 30 seconds, 300% rated current for 0.5 seconds.
Brake Output	Voltage (V)	24V
	Current (A)	1.5A
IO Interface	Digital Input	6 channels optocoupler isolated input.
	IO Power Output	24V, 1A
Encoder Interface	Absolute Encoder	Tamagawa: 17, 20, 23, 24 bits
		Nikon: 17, 20, 24 bits
		Sankyo: 17 bits
		Panasonic: 17, 23 bits
		Yaskawa: 17, 20, 24 bits
	Incremental Encoder	--
Sensor Interface	Pressure Sensor Interface	2 channels
Communication Interface	gLink-II Interface	2 pcs
	USB 2.0	2 pcs
	USB3.0	1 pcs
	gLink-I Interface	1 pcs
	LAN	2 pcs
	RS232	1 pcs
	eHMI	1 pcs
	VGA	1 pcs
Protective Function	Overvoltage, undervoltage, overcurrent, driver overheating, encoder disconnection, and phase loss detection.	

All product specifications are subject to change without notice.

Specifications

Function	Item	Description
Environment	Efficiency	97%
	Installation Method	Wall mount
	Protection Level	IP20
	Cooling	Fan cooling
	Use Place	Indoor, free from direct sunlight, no dust, no corrosive gas, no flammable gas, no oil mist, no water vapor, no dripping or no salt, etc.
	Altitude	Less than 2000 meters (Derating for use above 2000 meters, derating 1% for every 100 meters)
	Operating Temperature	-20°C ~ +55°C (Derating when the ambient temperature is higher than 55 °C)
	Storage Temperature	-40°C ~ +70°C
	Atmospheric Pressure	80kPa ~ 110kPa
	Humidity	Less than 90% Relative humidity, non-condensing.
	Installation Direction	In order to ensure the cooling effect of the drive, please be sure to install it vertically.

Hardware Connection

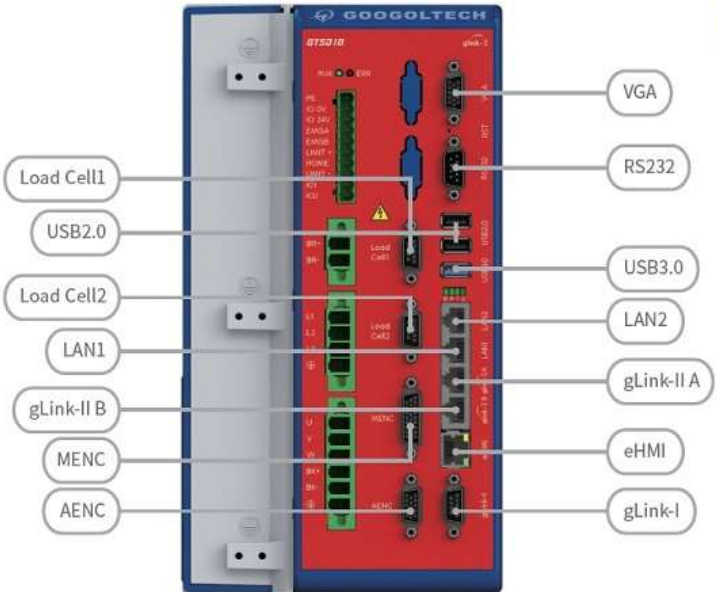

Connector Name	Description
gLink-I	Network Expansion IO Interface
eHMI	Network Human-Machine Interaction Interface
gLink-II B	Gigabit Ring Network Interface
gLink-II A	
LAN1	Gigabit Ethernet Interface
LAN2	
USB3.0	USB Interface
USB2.0	
RS-232	RS-232 Serial Communication Onterface
VGA	Display Interface
AENC	Auxiliary Encoder Input
MENC	Motor Encoder Interface
Load Cell 1	Sensor Interface 1
Load Cell 2	Sensor Interface 2

All product specifications are subject to change without notice.

Hardware Connection

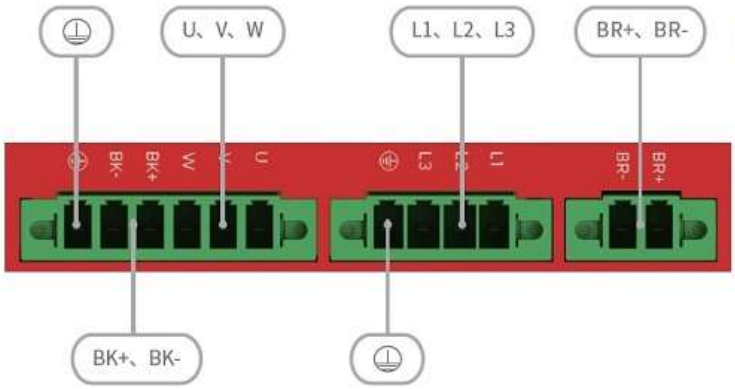

Terminal Name	Description
L1, L2, L3	Three-phase AC380V or three-phase AC220V control power input, single-phase AC220V connected to any two terminals.
⏚	GND
BR-, BR+	External Braking Resistor
U, V, W	Three-Phases AC Output
BK+, BK-	Motor Brake 24V Output

System Structure

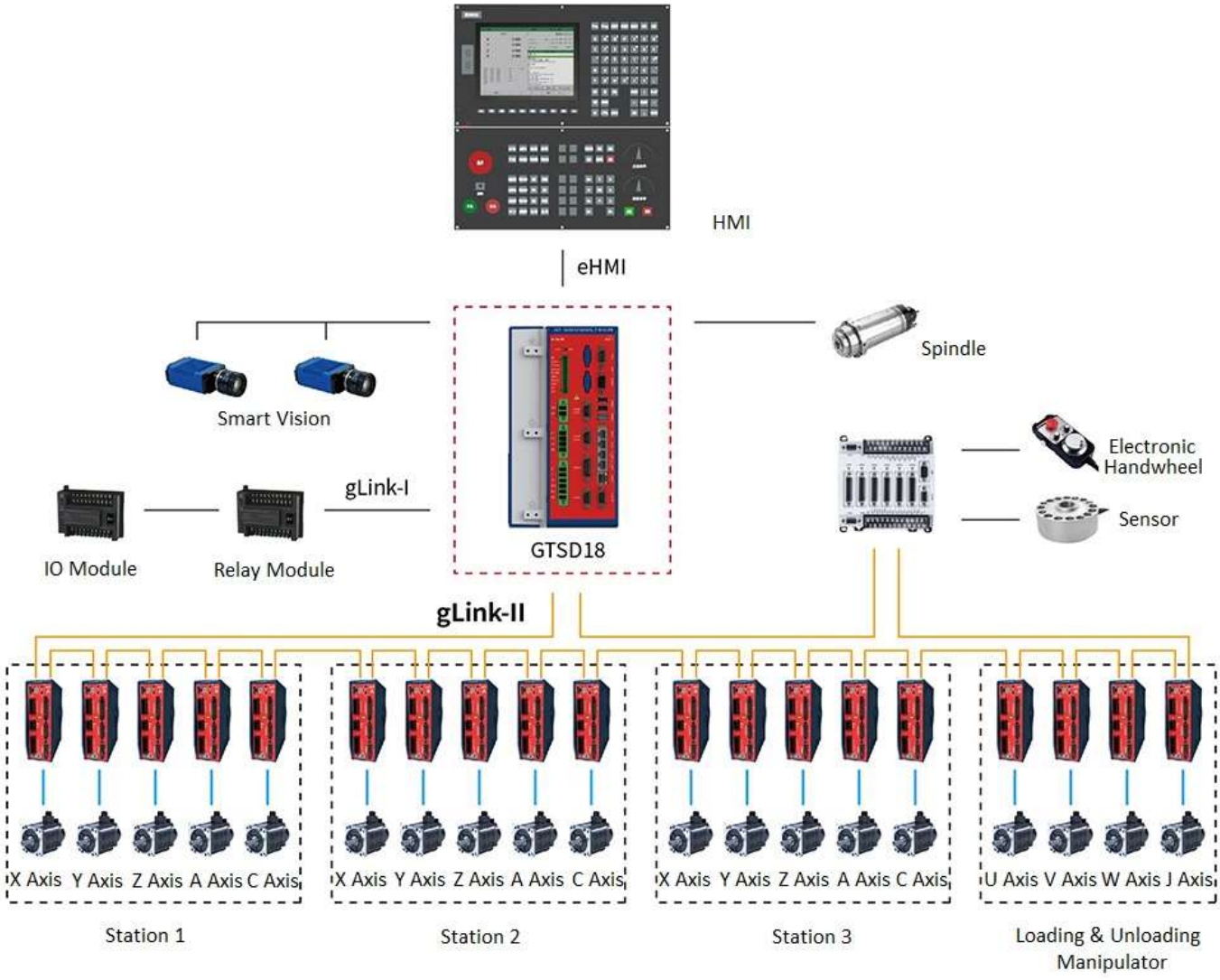

All product specifications are subject to change without notice.

Selection Guide

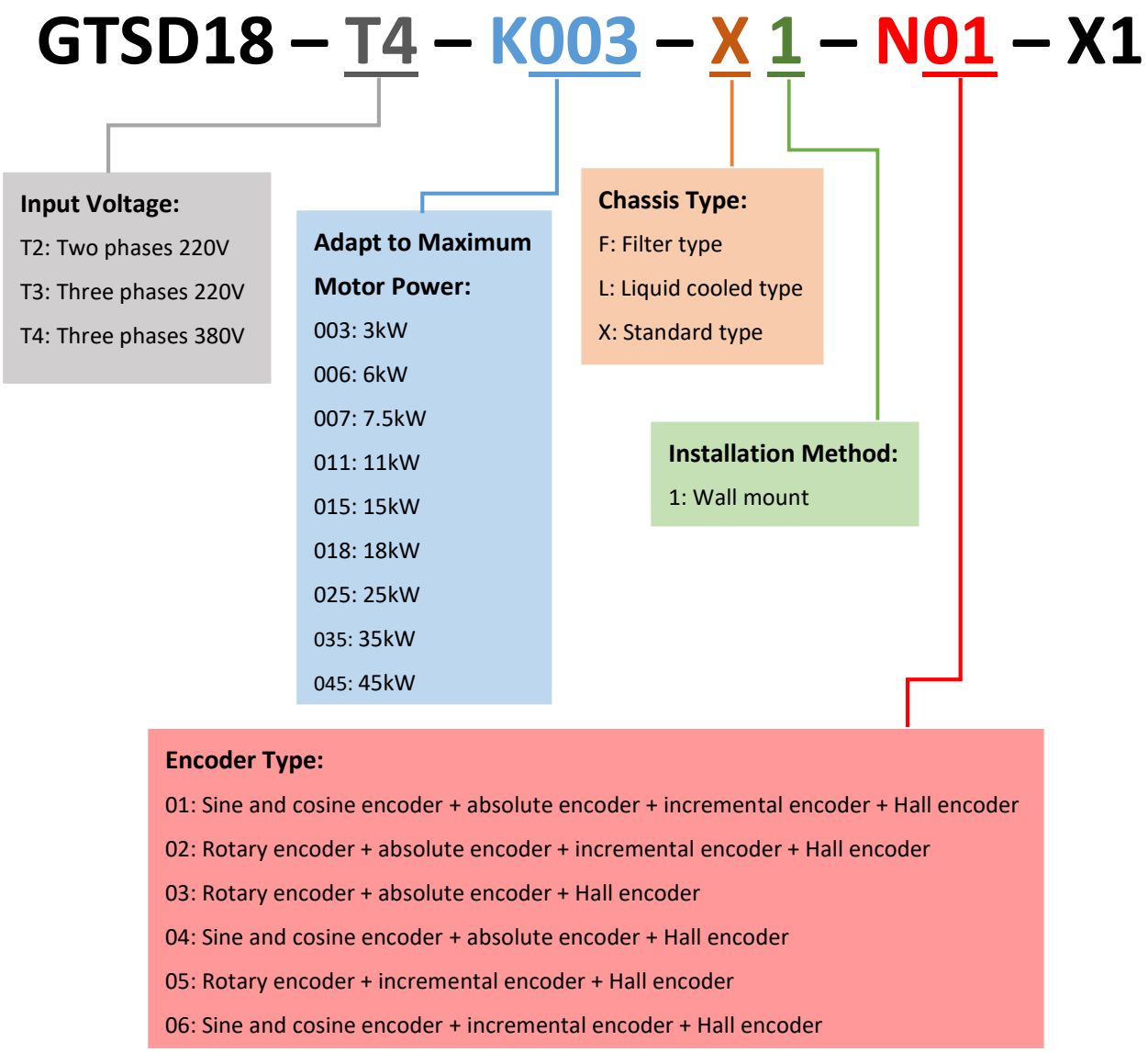

All product specifications are subject to change without notice.

Ordering Guide

Type	Item	Ordering Number	Description
Standard	GTSD18 Series Network Intelligent Servo Driver	GTSD18-T4-K003	Rated motor power: 3kW; Rated output current: 6A.
		GTSD18-T4-K006	Rated motor power: 6kW; Rated output current: 10A.
Optional	Braking Resistor	Aluminum Case Resistor	GTSD18-T4-K007X1 series use
		Corrugated Wire-Wound Braking Resistor	16Ω 1000W accuracy ±5%, GTSD18-T4-K011X1 series use.
		Corrugated Wire-Wound Power Resistor	TYPE B 30R 1.5kW accuracy ±10%, GTSD18-T4-K015X1 series use.
		Corrugated Wire-Wound Power Resistor	TYPE B 16R 2.5kW accuracy ±10%, GTSD18-T4-K025X1 series use.
	Connecting Cable	Incremental Encoder Cable	DB26P(M), 3m/5m.
		Absolute Encoder Cable	DB26P(M), 3m/5m.
		gLink-I Interface Cable	DB9F/M, extended IO connection cable, 0.3m/1.5m.

Dimension

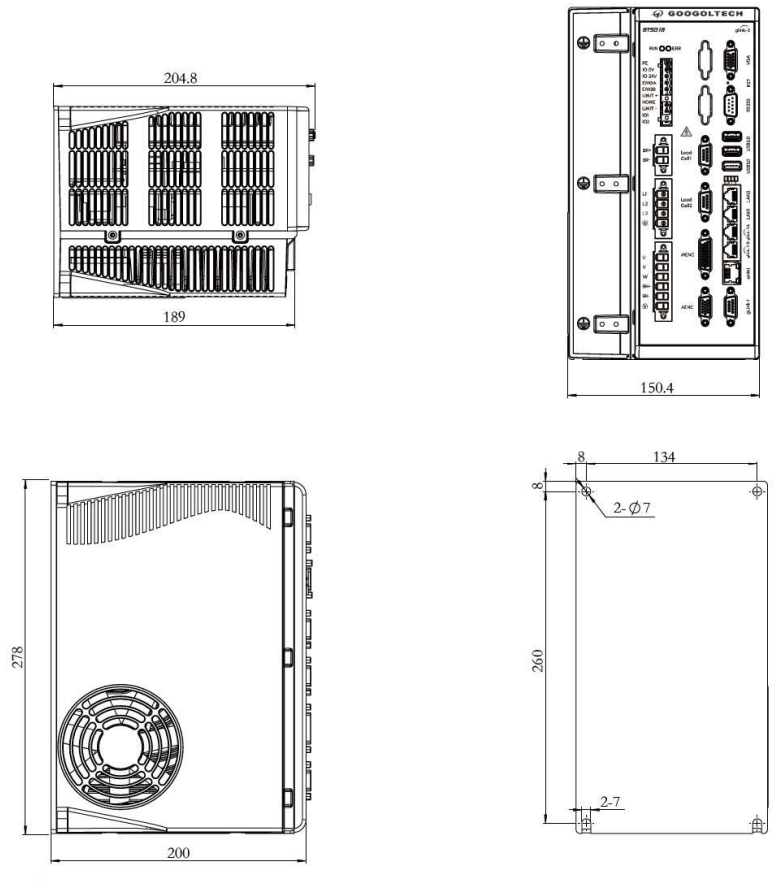

GTSD18 Series

All product specifications are subject to change without notice.

Applications

Case 1 - Multi-Channel Turning and Milling CNC System

Googoltech uses a networked, open, multi-channel, multi-axis linkage GTSD18 series servo driver, which combines an open CNC system development platform to provide customers with a highly integrated and cost-effective multi-channel CNC turning and milling system, The system is suitable for High-speed and high-precision control of compound processing machine tools. Compared with the international high-end multi-channel and multi-axis linkage CNC system, this system has high reliability, moderate price, and has obvious advantages in high-speed and high-precision machining performance.

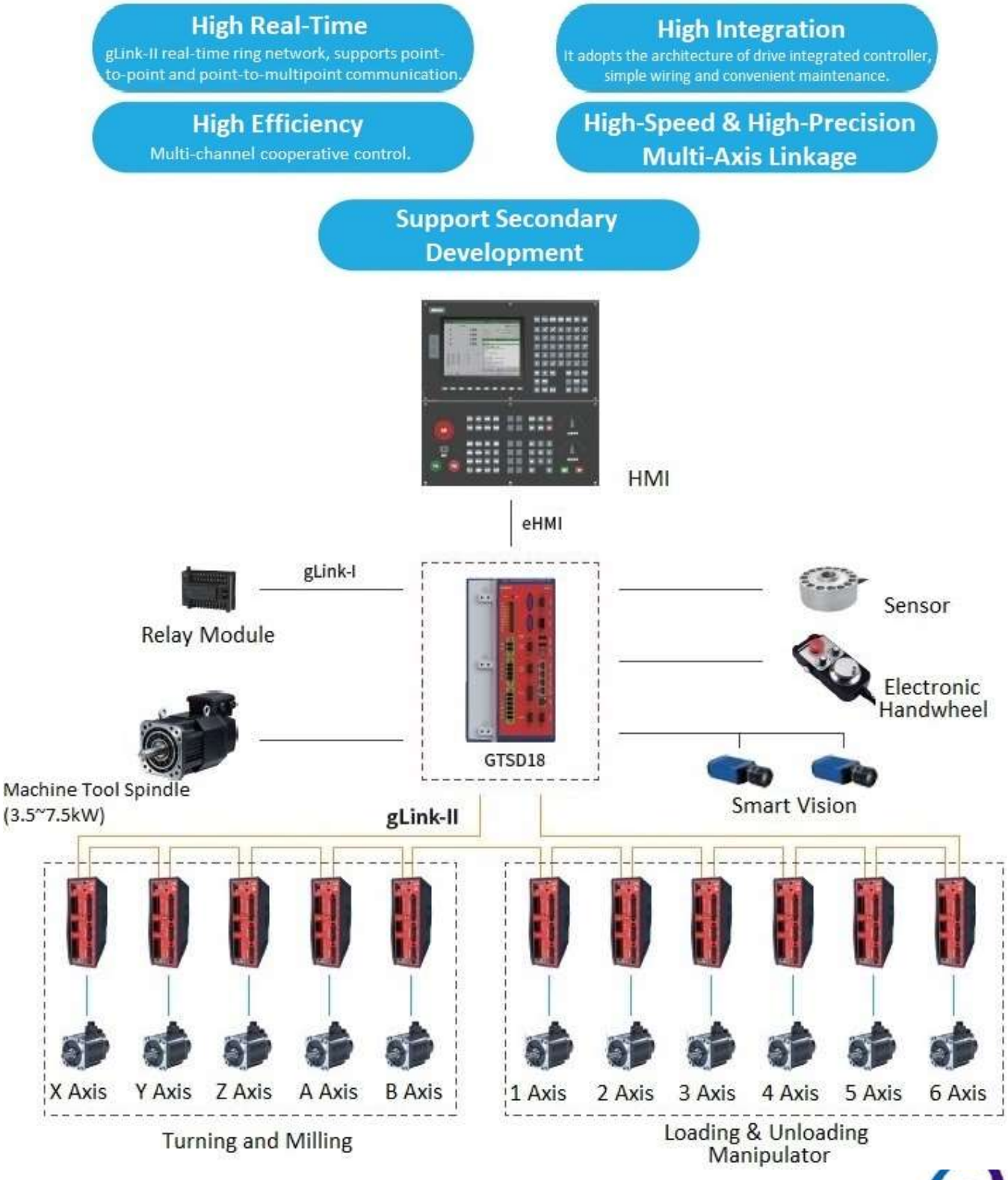

All product specifications are subject to change without notice.

Applications

Case 2 - High-Speed, Multi-Axis Synchronous Distributed Printing Control System

The system breaks through the bottleneck of the traditional electronic shaft gravure printing machine centralized control system. It integrates the motion control system, the color register control system and the tension system, reduces the physical connection, greatly reduces the wiring cost, and simplifies the equipment site Installation and maintenance.

High-Speed Synchronous Control
The gLink-II ring network protocol supports microsecond-level coordination of multiple controllers.

The System is Safe & Reliable
The redundant ring topology structure is adopted to realize data redundancy and link redundancy.

High Integration
It integrates motion control, color registration, and tension control.

Easy Maintenance
Support remote maintenance.

Simple Wiring, Cost Saving

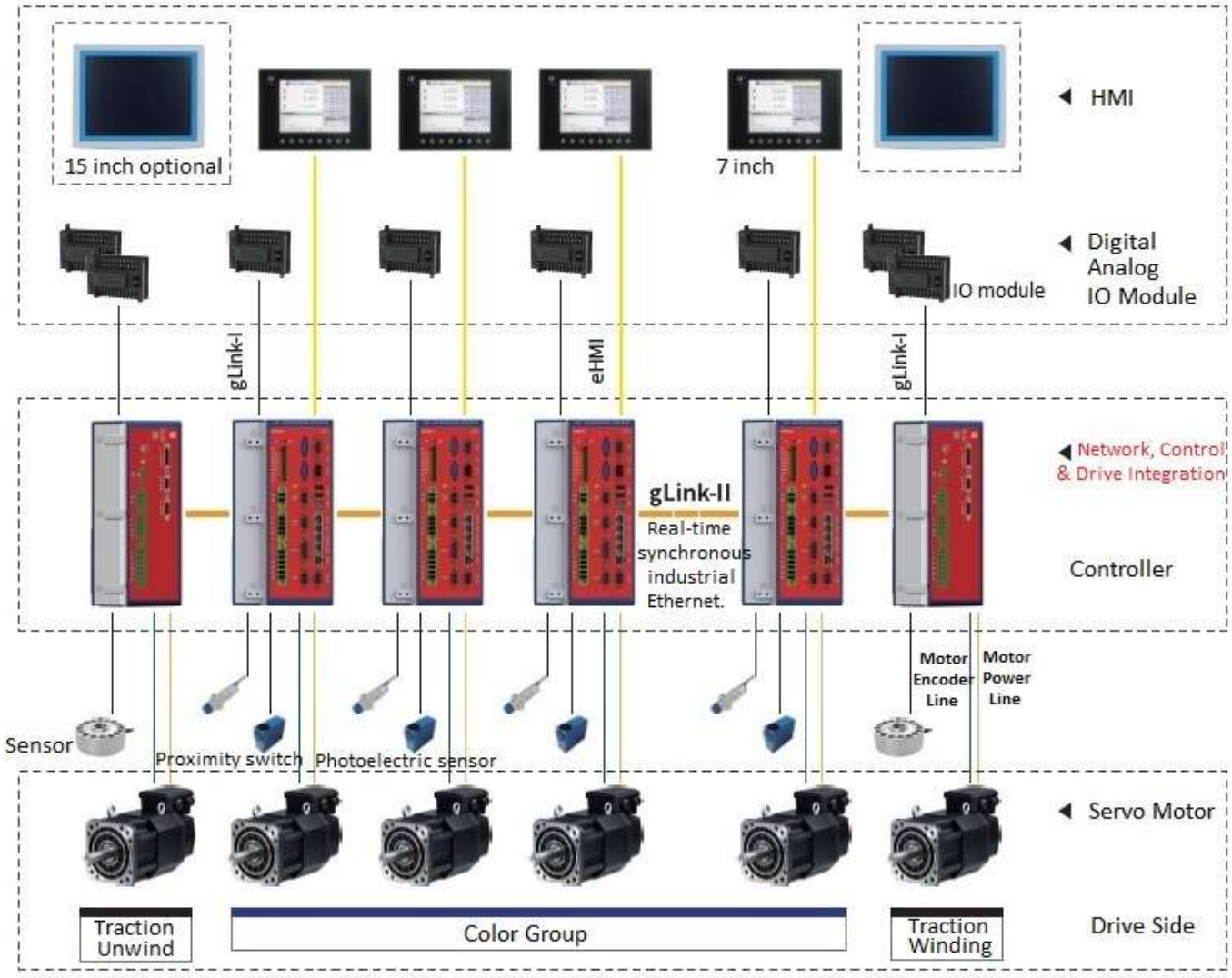

All product specifications are subject to change without notice.

Applications

Case 3 - Intelligent Force Position Control System

Googoltech uses GTSD18 series servo driver, with high-performance electric servo-cylinder, pressure sensor and high-resolution grating ruler, to provide customers with an intelligent force position control system for precision press machine. This system is widely used in the press equipment of key components in the automobile and electronics industries.

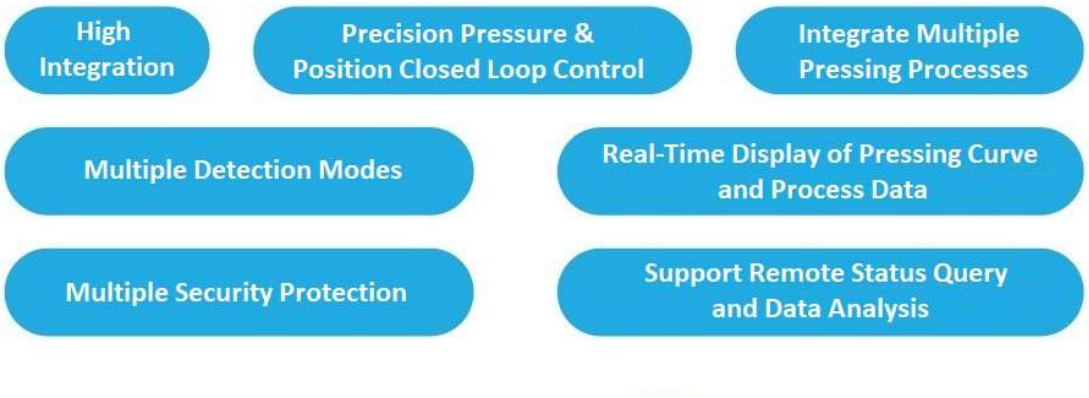

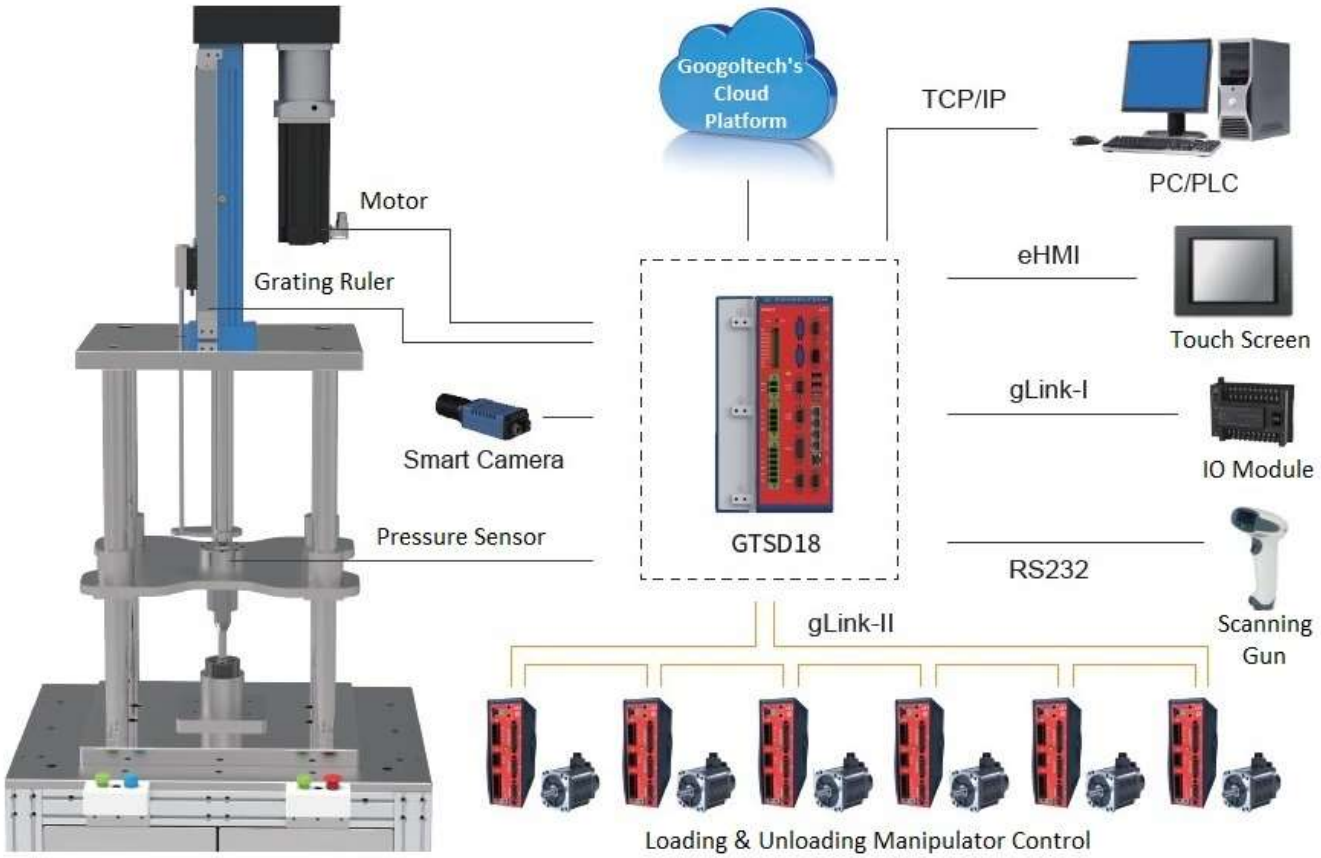

GOOGOLTECH

GOOGOL TECHNOLOGY (HK) LIMITED
Unit 1008-09, 10/F C-Bons International Center, 108 Wai Yip Street, Kwun Tong, Kowloon, Hong Kong
Tel.: +(852) 2358-1033
Fax:+ (852)2719-8399
E-mail: hkgoogol@gmail.com / sales@googoltech.com
Web: http://www.googoltech.com

GOOGOL TECHNOLOGY (SZ) LIMITED
Room W211, IER Building (PKU-HKUST High-tech Industrial Park, Nanshan District, Shenzhen, PRC (Postal Code: 518057)
Tel.: +(86) 755-26970817, 755-26970824,
Fax: +(86) 755- 26970821
E-mail: googol@googoltech.com
Web: www.googoltech.com.cn

GOOGOL TECHNOLOGY (TWN) LIMITED
2F., No. 22, Ln. 10, Fuzhong 2nd St., Xitun Dist., Taichung City 407, Taiwan
Tel.: +(886) 4-2358-8245
E-mail: twinfo@googoltech.com
Web: http://www.googoltech.com

All product specifications are subject to change without notice.