GSKL/GSKM/GSKH Series Servo Motor

Overview

GSKL / GSKM / GSKH series AC servo motor with independent intellectual property rights, using the high-performance rare earth permanent magnetic materials; with small size, high power density, overload capacity, small cogging torque, low noise and beautiful appearance and other prominent advantages.

Main Features

- High performance rare earth permanent magnet rotor; high, medium and low inertia are optional, good dynamic response
- Three-phase Back EMF sine design, very low cogging torque, good low speed smoothing characteristics
- Encoder feedback mode is optional
  - Incremental photoelectric encoder;
  - Wire-saving incremental photoelectric encoder;
  - Single-turn absolute encoder;
  - Multi-turn absolute encoder;
- Output shaft with oil seal protection, and standard brake is optional
- Protection class IP65 or IP67, B or F class insulation
- Compliant with **3C, CE, UL** certification and **RoHS** standards.

Applications

GSKL/GSKM/GSKH series AC servo motor features small size, high power density, overload capacity, small cogging torque, low noise and beautiful appearance and other prominent advantages. GSKL/GSKM/GSKH series servo motors are offered a perfectly matched servo bundle in combination with the GTHD series servo drive family.

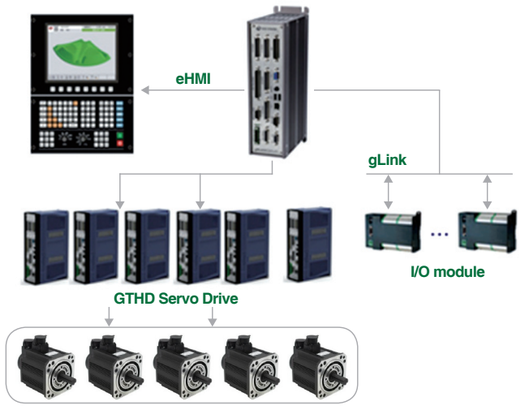

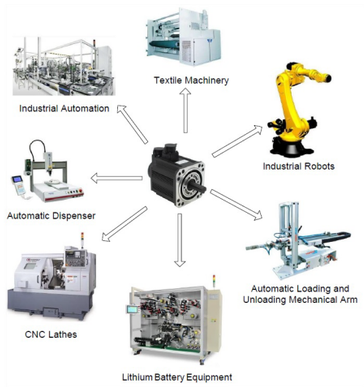

Specifications

40 Series Servo Motor

Model NO.	KJM-00504 □□230□□□	KJM-01004 □□230□□□
Rated Power (W)	50	100
Rated Voltage (V)	220	220
Rated Current (A(rms))	0.65	1.2
Instantaneous Max. Current (A(o-p))	1.95	3.6
Rated Torque (N•m)	0.16	0.32
Instantaneous Max. Torque (N•m)	0.48	0.96
Rated Speed (rpm)	3000	3000
Max. Speed (rpm)	6000	6000
Torque coefficient (N•m /A)	0.25	0.27
Back EMF coefficient (V/krpm)	17	18.5
Line-Line Resistance (Ω)	26.5	14.2
Line-Line Inductance (mH)	20.3	11.9
Pole Number	10	10
Motor Inertia ($x10^{-4}$ kg • m^2)	0.032 (0.037)	0.055 (0.060)
Electrical Time Constant (ms)	0.77	0.84
Mechanical Time Constant (ms)	1.84 (2.12)	1.43 (1.57)
Weight (kg)	0.38 (0.58)	0.46 (0.66)
Allowable Radial Load (N)	70	
Allowable Axial Load (N)	50	
Insulation Class	F	
Safety Class	Totally Enclosed, Self-Cooled, IP65	
Cooling Pad Size(mm)	Aluminum 200×200×6	

Note: ( ) The parameter values of the servo motor with brake are in brackets.

60 Series Servo Motor

Model NO.	KS□-02006 □□230□□□	KS□-04006 □□230□□□
Rated Power (W)	200	400
Rated Voltage (V)	220	220
Rated Current (A(rms))	1.7	2.8
Instantaneous Max. Current (A(o-p))	5.1	8.4
Rated Torque (N•m)	0.64	1.27
Instantaneous Max. Torque (N•m)	1.92	3.81
Rated Speed (rpm)	3000	3000
Max. Speed (rpm)	5000	5000
Torque coefficient (N•m /A)	0.38	0.45
Back EMF coefficient (V/krpm)	25.7	33.2
Line-Line Resistance (Ω)	5.65	3.44
Line-Line Inductance (mH)	16.2	12.4
Pole Number	10	10
Motor Inertia ($x10^{-4}$ kg • m^2)	0.14 (0.17) L	0.26 (0.29) L
Electrical Time Constant (ms)	2.87	3.6

GSKL/GSKM/GSKH Series Servo Motor

60 Series Servo Motor

Model NO.	KS□-02006 □□230□□□	KS□-04006 □□230□□□
Mechanical Time Constant (ms)	0.74 (0.90) L 2.22 (2.38) H	0.54 (0.60) L 1.47 (1.53) H
Weight (kg)	0.90 (1.30) L 1.10 (1.40) H	1.25 (1.75) L 1.45 (1.95) H
Allowable Radial Load (N)	210	
Allowable Axial Load (N)	60	
Insulation Class	B	
Safety Class	Totally Enclosed, Self-Cooled, IP65	
Cooling Pad Size (mm)	Aluminum 200×200×6	

Note:
1.( ) The parameter values of the servo motor with brake are in brackets.
2.L is a low inertia motor, and H is a high inertia motor.

80 Series Servo Motor

Model NO.	KSH-07508 □□230□□□	KS□-10008 □□230□□□
Rated Power (W)	750	1000
Rated Voltage (V)	220	220
Rated Current (A(rms))	4.2	5.8
Instantaneous Max. Current (A(o-p))	12.6	17.4
Rated Torque (N•m)	2.39	3.18
Instantaneous Max. Torque (N•m)	7.2	9.54
Rated Speed (rpm)	3000	3000
Max. Speed (rpm)	5000	5000
Torque coefficient (N•m /A)	0.57	0.55
Back EMF coefficient (V/krpm)	36.8	35.8
Line-Line Resistance (Ω)	1.15	0.87
Line-Line Inductance (mH)	5.5	3.85
Pole Number	10	10
Motor Inertia ($x10^{-4}$ kg • m^2)	1.57 (1.67)	1.24 (1.34)
Electrical Time Constant(ms)	4.78	4.43
Mechanical Time Constant(ms)	0.78 (0.83)	0.5 (0.54)
Weight (kg)	2.9 (3.7)	3.3 (4.1)
Allowable Radial Load (N)	360	
Allowable Axial Load (N)	120	
Insulation Class	B	
Safety Class	Totally Enclosed, Self-Cooled, IP65	
Cooling Pad Size(mm)	Aluminum 250×250×6	

Note: ( ) The parameter values of the servo motor with brake are in brackets.

Specifications

130 Series Servo Motor

Model NO.	KS□-10013 □□220□□□	KS□□-15013 □□220□□□	KSM-20013 □□220□□□	KSM-30013 □□230□□□
Rated Power (kW)	1	1.5	2	3
Rated Voltage (V)	220	220	220	220
Rated Current (A(rms))	5.4	8	11.5	11.5
Instantaneous Max. Current (A(o-p))	16.2	24	30	30
Rated Torque (N•m)	4.77	7.16	9.55	9.55
Instantaneous Max. Torque (N•m)	14.3	21.5	28.6	28.6
Rated Speed (rpm)	2000	2000	2000	3000
Max. Speed (rpm)	3000	3000	3000	3500
Torque coefficient (N•m /A)	0.88	0.895	0.83	0.83
Back EMF coefficient (V/krpm)	56.7	58.6	56.6	56.6
Line-Line Resistance (Ω)	0.98	0.63	0.5	0.5
Line-Line Inductance (mH)	8.3	5.6	3.7	3.7
Pole Number	10	10	10	10
Motor Inertia ($x10^{-4}$ kg • m^2)	9.0 (10.5) M	13.0 (14.5) M	17 (18.5)	17 (18.5)
Electrical Time Constant (ms)	8.47	8.9	7.4	7.4
Mechanical Time Constant (ms)	1.6 (1.86) M	1.42 (1.58) M	1.64 (1.78)	1.64 (1.78)
Weight (kg)	5.8 (7.4) M	7.0 (8.8) M	8.4 (10.2)	8.4 (10.2)
Allowable Radial Load (N)	600		900	
Allowable Axial Load (N)	300		320	
Insulation Class	F			
Safety Class	Totally Enclosed, Self-Cooled, IP67			
Cooling Pad Size (mm)	Aluminum 300×300×12		Aluminum 400×400×20	

Note:
1.( ) The parameter values of the servo motor with brake are in brackets.
2.M is a medium inertia motor, and H is a high inertia motor.

Dimension

40 Series Servo Motor

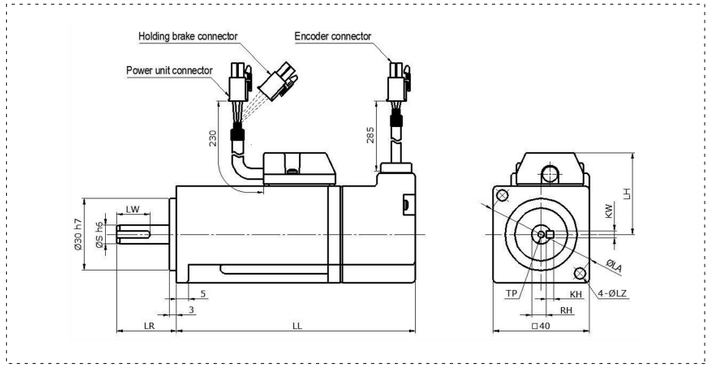

GSKL/GSKM/GSKH Series Servo Motor

60 Series Servo Motor

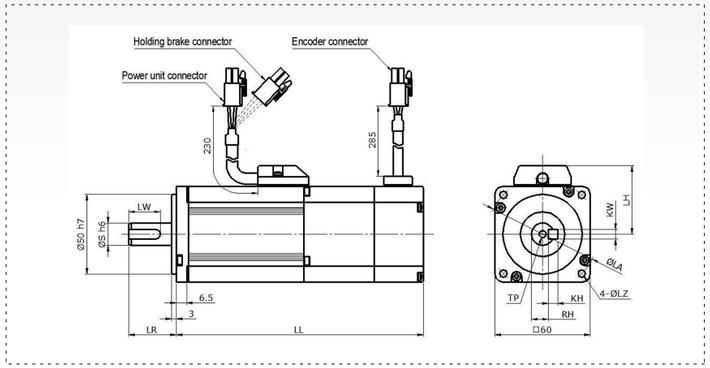

80 Series Servo Motor

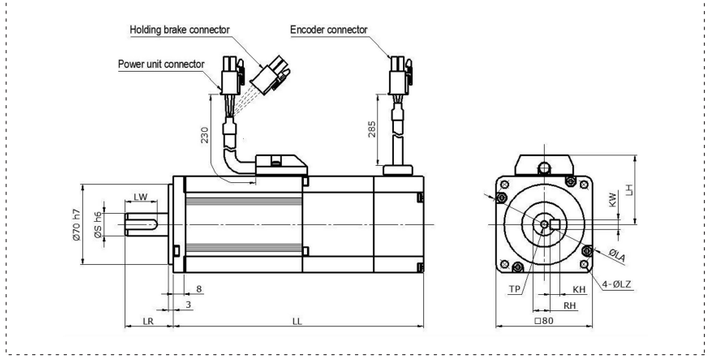

130 Series Servo Motor

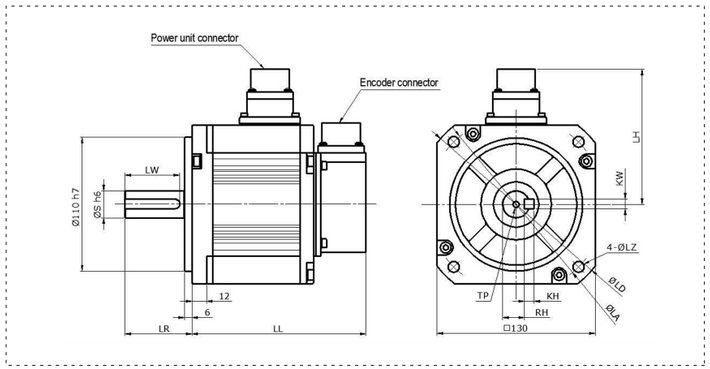

Ordering Guide

Ordering Number	Model No.	Description
GSKM-T3S05T6N040G	KJM-00504J2230A01	40 Series Servo Motor (Flange), 50W, 3000RPM, 0.16N.m, 23-bit absolute value
GSKM-T3S10T6N040G	KJM-01004J2230A01	40 Series Servo Motor (Flange), 100W, 3000RPM, 0.32N.m, 23-bit absolute value
GSKH-T3S20T6B060G	KSH-02006J2230FS1	60 Series Servo Motor (Flange), 200W, 3000RPM, 0.64N.m, 23-bit absolute value
GSKH-T3S40T6B060G	KSH-04006J2230AS1	60 Series Servo Motor (Flange), 400W, 3000RPM, 1.30N.m, 23-bit absolute value
GSKH-T3S75T6B080G	KSH-07508J2230AS1	80 Series Servo Motor (Flange), 750W, 3000RPM, 2.40N.m, 23-bit absolute value
GSKM-T3M10T6B080G	KSM-10008J4230AS1	80 Series Servo Motor (Flange), 1000W, 3000RPM, 3.20N.m, 23-bit absolute value
GSKM-T2M10T6B130G	KSM-10013J4220AS1	130 Series Servo Motor (Flange), 1000W, 2000RPM, 4.77N.m, 23-bit absolute value
GSKM-T2M15T6B130G	KSM-15013J4220AS1	130 Series Servo Motor (Flange), 1500W, 2000RPM, 7.16N.m, 23-bit absolute value
GSKM-T2M20T6B130G	KSM-20013J4220AS1	130 Series Servo Motor (Flange), 2000W, 2000RPM, 9.55N.m, 23-bit absolute value
GSKM-T2M30T6B130G	KSM-30013J4220AS1	130 Series Servo Motor (Flange), 3000W, 2000RPM, 14.30N.m, 23-bit absolute value

Selection Guide

GS K L – S 1 S40 x x B 040 G

Inertia
- L Low
- M Medium
- H High

Motor phase number
- S Single-phase
- T Three-phase
- D Direct current

Rated speed (rpm)
- 1 1000
- 2 2000
- 3 3000
- 4 1500

Rated power (W)
- S <1000W; xx (X10W)
- M 1kW~50KW; xx (X100W)
- L >=50KW; xx (X10kW)

Feedback type
- E Photoelectric encoder
- R Rotary transformer
- H Hall sensor
- T Tamagawa
- Z No sensing
- S Sinusoidal encoder
- A Absolute encoder

Resolution
- 1 2048
- 2 2500
- 3 8192
- 4 Nikon 17bit
- 5 Tamagawa 17bit
- 6 Tamagawa 23bit

Brake
- B Brake motor
- N Without brake

Flange size
- 040 40mm
- 060 60mm
- 080 80mm
- 086 86mm
- 130 130mm
- 180 180mm

Connector type
- G Universal connector
- M Customized connector